DC-Micromotors

19 mNm

Graphite Commutation

24 W

Series 2342 ... CR

Values at 22°C and nominal voltage		2342 S	006 CR	012 CR	018 CR	024 CR	036 CR	048 CR	
1	Nominal voltage	U_N	6	12	18	24	36	48	V
2	Terminal resistance	R	0,4	1,9	4,1	7,1	15,9	31,2	Ω
3	Efficiency, max.	$\eta_{max.}$	81	80	81	81	81	81	%
4	No-load speed	n_0	9 000	8 100	8 000	8 500	8 100	8 000	min^{-1}
5	No-load current, typ. (with shaft ø 3 mm)	I_0	0,17	0,075	0,048	0,038	0,024	0,017	A
6	Stall torque	M_H	87,2	80	86,5	85,4	91,4	84,4	mNm
7	Friction torque	M_R	0,98	1	0,99	0,99	0,99	0,95	mNm
8	Speed constant	k_n	1 650	713	462	366	231	170	min^{-1}/V
9	Back-EMF constant	k_E	0,604	1,4	2,16	2,73	4,34	5,87	mV/min^{-1}
10	Torque constant	k_M	5,77	13,4	20,7	26,1	41,4	56,1	mNm/A
11	Current constant	k_I	0,173	0,075	0,048	0,038	0,024	0,018	A/mNm
12	Slope of n-M curve	$\Delta n/\Delta M$	103	101	92,5	99,5	88,6	94,8	min^{-1}/mNm
13	Rotor inductance	L	13,5	65	150	265	590	1 050	µH
14	Mechanical time constant	τ_m	6	6	6	6	6	6	ms
15	Rotor inertia	J	5,6	5,7	6,2	5,8	6,5	6	gcm^2
16	Angular acceleration	$\alpha_{max.}$	160	140	140	150	140	140	$\cdot 10^3 rad/s^2$
17	Thermal resistance	R_{th1} / R_{th2}	3 / 15						K/W
18	Thermal time constant	τ_{w1} / τ_{w2}	6,5 / 490						s
19	Operating temperature range:								
	– motor		-30 ... +100						°C
	– winding, max. permissible		+125						°C
20	Shaft bearings		ball bearings, preloaded						
21	Shaft load max.:								
	– with shaft diameter		3						mm
	– radial at 3 000 min^{-1} (3 mm from bearing)		20						N
	– axial at 3 000 min^{-1}		2						N
	– axial at standstill		20						N
22	Shaft play:								
	– radial	≤	0,015						mm
	– axial	=	0						mm
23	Housing material		steel, black coated						
24	Mass		88						g
25	Direction of rotation		clockwise, viewed from the front face						
26	Speed up to	$n_{max.}$	11 000						min^{-1}
27	Number of pole pairs		1						
28	Magnet material		NdFeB						

Rated values for continuous operation									
29	Rated torque	M_N	14	17	18	17	19	18	mNm
30	Rated current (thermal limit)	I_N	2,9	1,5	1	0,78	0,53	0,38	A
31	Rated speed	n_N	7 140	6 090	6 040	6 470	6 160	5 910	min^{-1}

Note: Rated values are calculated with nominal voltage and at a 22°C ambient temperature. The R_{th2} value has been reduced by 25%.

Note:

The diagram indicates the recommended speed in relation to the available torque at the output shaft for a given ambient temperature of 22°C.

The diagram shows the motor in a completely insulated as well as thermally coupled condition (R_{th2} 50% reduced).

The nominal voltage (U_N) curve shows the operating point at nominal voltage in the insulated and thermally coupled condition. Any points of operation above the curve at nominal voltage will require a higher operating voltage. Any points below the nominal voltage curve will require less voltage.

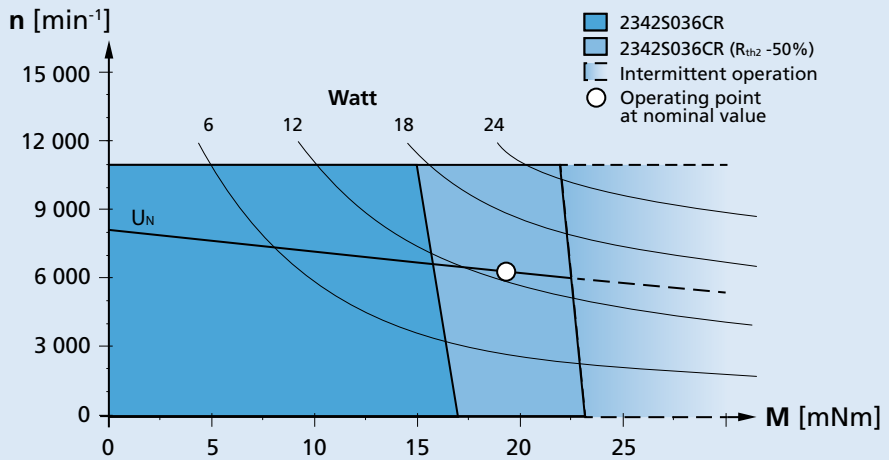

Recommended operation areas (example: nominal voltage 36V)

For notes on technical data and lifetime performance refer to "Technical Information".

© DR. FRITZ FAULHABER GMBH & CO. KG
Specifications subject to change without notice.

Dimensional drawing

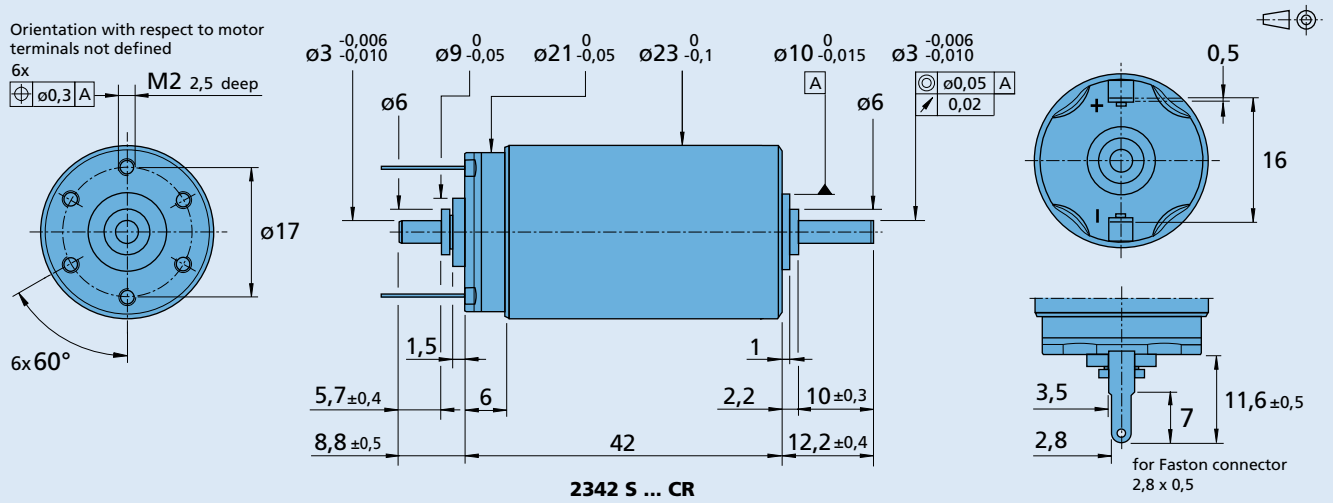

2342 S ... CR

Options

Example product designation: **2342S012CR-158**

Option	Type	Description
U	Single Leads	For motors with single leads (PTFE), length 160 mm, red (+) / black (-)
158	Shaft end	No second shaft end

Product combination

Precision Gearheads / Lead Screws	Encoders	Drive Electronics	Cables / Accessories
22F	IE3-1024	SC 2402 P	MBZ
22/7	IE3-1024 L	SC 2804 S	
23/1	IERS3-500	SC 5004 P	To view our large range of accessory parts, please refer to the "Accessories" chapter.
26A	IERS3-500 L	SC 5008 S	
26/1	IER3-10000	MCDC 3002 P	
26/1 R	IER3-10000 L	MCDC 3002 S	
30/1		MCDC 3003 P	
30/1 S		MCDC 3006 S	
BS22-1.5		MC 5004 P	
		MC 5005 S	

For notes on technical data and lifetime performance refer to "Technical Information".

© DR. FRITZ FAULHABER GMBH & CO. KG
Specifications subject to change without notice.

Planetary Gearheads

0,7 Nm

For combination with
DC-Micromotors
Brushless DC-Motors
Stepper Motors

Series 23/1

	23/1
Housing material	metal
Geartrain material	steel
Recommended max. input speed for:	
– continuous operation	4 000 min^{-1}
Backlash, at no-load	≤ 1 °
Bearings on output shaft	ball bearings, preloaded
Shaft load, max.:	
– radial (10 mm from mounting face)	≤ 170 N
– axial	≤ 150 N
Shaft press fit force, max.	≤ 150 N
Shaft play	
– radial (10 mm from mounting face)	≤ 0,03 mm
– axial	≤ 0,1 mm
Operating temperature range	- 30 ... + 100 °C

Specifications

Number of gear stages		**1**	**2**	**3**	**4**	**5**
Continuous torque	mNm	200	300	700	700	700
Intermittent torque	mNm	400	600	1 000	1 000	1 000
Mass without motor, ca.	g	60	70	90	100	110
Efficiency, max.	%	88	80	70	60	55
Direction of rotation, drive to output		=	=	=	=	=
Reduction ratio [1] (rounded)		**3,71:1**	**9,7:1** **14:1**	**43:1** **66:1**	**94:1** **112:1** **134:1** **159:1** **190:1** **246:1**	**415:1** **592:1** **989:1** **1 526:1**
L2 [mm] = length without motor [2]		27,9	34,1	40,3	46,4	52,6
L1 [mm] = length with motor	2224U...SR	48,2	54,4	60,6	66,7	72,9
	2230U...S	54,0	60,2	66,4	72,5	78,7
	2232U...SR	56,2	62,4	68,6	74,7	80,9
	2233U...S	56,6	62,8	69,0	75,1	81,3
	2237S...CXR	64,9	71,1	77,3	83,4	89,6
	2342S...CR	69,9	76,1	82,3	88,4	94,6
	2057S...B	84,9	91,1	97,3	103,4	109,6
	2057S...BHS	84,9	91,1	97,3	103,4	109,6
	2444S...B	71,9	78,1	84,3	90,4	96,6
	AM2224...-10	55,6	61,8	68,0	74,1	80,3

[1] The reduction ratios are rounded, the exact values are available on request or at www.faulhaber.com.
[2] L2 - 3,9 mm, in combination with 2224U...SR, 2230U...S, 2232U...SR, 2233U...S and AM2224.

Note: Reduction ratio 3,71:1 with motor types 2224U...SR, 2230U...S, 2232U...SR, 2233U...S and AM2224 shall be ordered as 23/1 3,71:1 - K288.

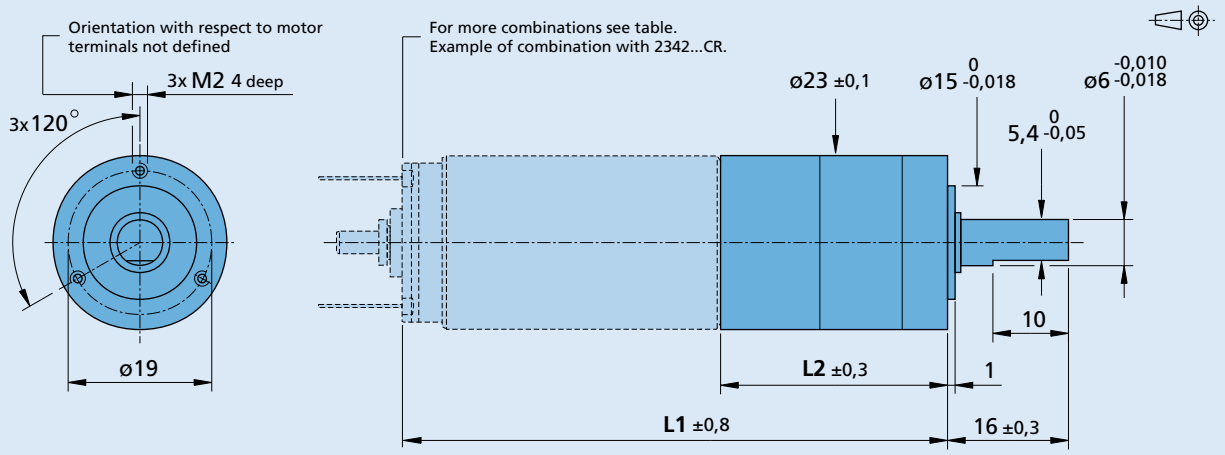

23/1

For notes on technical data and lifetime performance refer to "Technical Information".
Edition 2016

© DR. FRITZ FAULHABER GMBH & CO. KG
Specifications subject to change without notice.
www.faulhaber.com